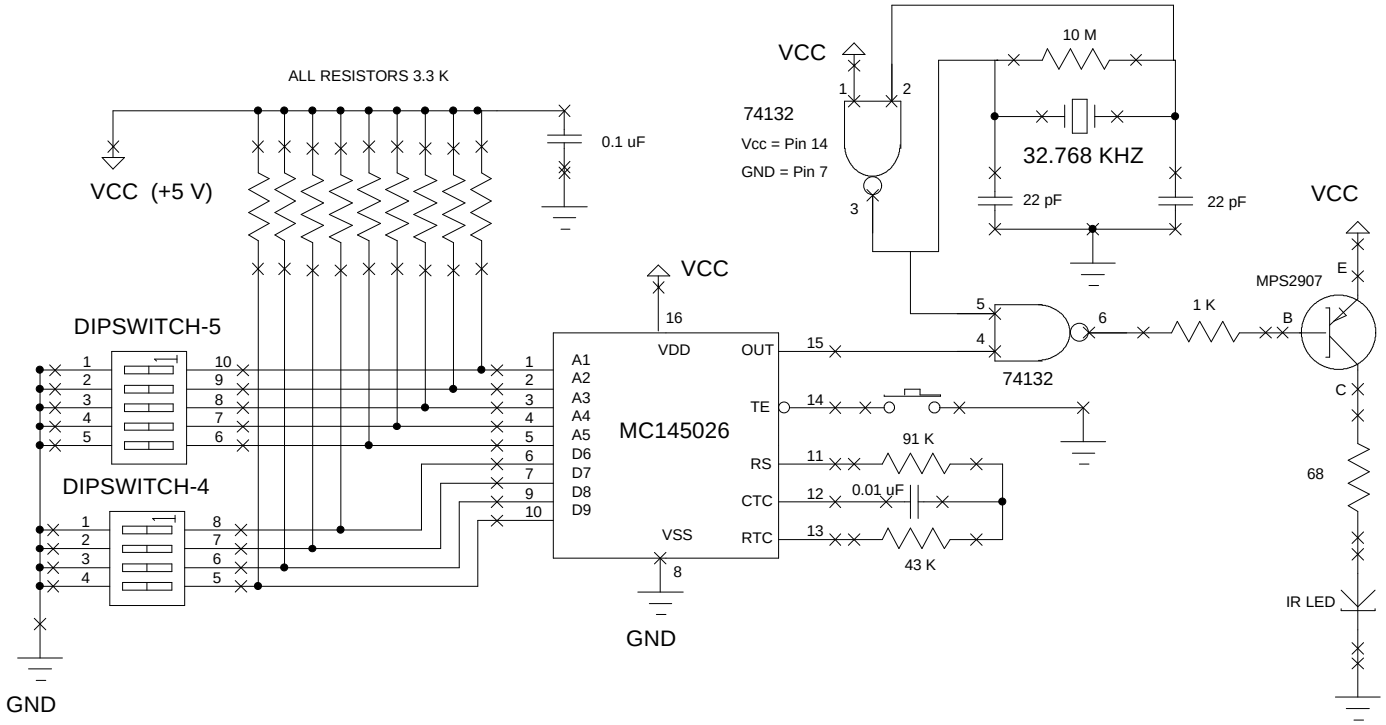
ALL RESISTORS 3.3 K
VCC (+5 V)
0.1 uF
VCC
74132
Vcc = Pin 14
GND = Pin 7
10 M
32.768 KHZ
22 pF
22 pF
VCC
MPS2907
E
B
C
1 K
68
IR LED
DIPSWITCH-5
DIPSWITCH-4
VCC
VDD
OUT
TE
RS
CTC
RTC
VSS
A1
A2
A3
A4
A5
D6
D7
D8
D9
MC145026
91 K
0.01 uF
43 K
74132
GND
GND